*Simulation in Production*
*and Logistics 2015*
Markus Rabe & Uwe Clausen (eds.)
Fraunhofer IRB Verlag, Stuttgart 2015

# Simulation-based Decision Support for Vertical Supply Chain Segmentation Scenarios

***Simulationsbasierte Entscheidungsunterstützung für Szenarien der vertikalen Supply-Chain-Segmentierung***

Sebastian Terlunen, Dennis Horstkemper, Martin Wölck, Bernd Hellingrath,
Westfälische Wilhelms-Universität Münster, Münster (Germany),
sebastian.terlunen@ercis.de, dennis.horstkemper@ercis.de, martin.woelck@uni-muenster.de, bernd.hellingrath@ercis.de

**Abstract:** In order to compete in high wage countries, many companies aim to deliver high quality products with specialised service offers to their customers instead of simply competing by employing lower prices. Therefore, these companies often have to segment their supply chains in multiple ways to satisfy the different expectations of a heterogeneous customer base – one size just doesn't fit all anymore. However, market dynamics and volatile customer behaviour make it hard to decide how exactly such a supply chain segmentation should be performed. These complex interactions make it impossible to solve this problem by applying exact optimisation algorithms. Thus, this work identifies an applicable simulation paradigm to provide decision support to viably define such segments. Moreover, needed adaptations of the chosen simulation paradigm are discussed conceptually and an implementation approach is presented. Hereby, our main research contribution lies in revealing the necessary adaptations and in integrating the appropriate planning approaches.

## 1 The Necessity of Evaluation Approaches for Vertical Supply Chain Segmentation

Supply chains nowadays operate in an increasingly complex, dynamic and uncertain business environment. Increased customer expectations, e.g. the demand for a high number of product variants and features, more responsive support services, and higher product availability, drive market dynamics. The resulting higher product variety causes unstable or unknown demands due to a higher multitude of products, high rates of new product introductions and shorter life cycles (Bozarth C. et al. 2009). To cope with these dual objectives of customer orientation and cost minimisation, especially in high-wage countries, the topic of supply chain segmentation has gathered substantial interest in research and practice (PricewaterhouseCoopersAG 2013; Hofman 2011). In this context, we focus on vertical supply chain segmentation (vSCS). A vertical segmentation separates the supply chain in two planning

areas, divided by means of the customer order decoupling point. The position of the customer order decoupling point massively influences multiple possibly contrary but interrelated target values, such as operational target values, e.g. cost minimisation, and market target values, e.g. the minimisation of delivery times (Aitken et al. 2005).

However, neither practical nor scientific literature offers appropriate best practices to determine the ideal vSCS due to the high number of factors influencing this decision. Furthermore, dynamic and turbulent market environments and the endeavour to align the supply chain processes more strongly towards the customer needs as well as the omnipresent target of cost minimisation imply that a specific vSCS will never be appropriate for long time frames. Consequently, a vSCS can only be applicable for a certain timeframe considering the specific environment of the producing company. Thus, a practical need for an efficient decision support for the determination of an optimal vSCS within applicable timeframes can be deduced.

For decision support throughout complex supply chains, several mathematical models exist (Hennies et al. 2014). These mathematical models can be used to analyse and benchmark the performance of different supply chain alternatives. They can be classified into analytical and simulation models (Law 2015). Analytical models, like queuing systems and linear programming models, describe the problem in a closed system of equations and can be solved exactly. They are, however, often difficult to formulate and usually very time consuming to solve (Page and Kreutzer 2005; Law 2015). Simulation is a method for analysing complex real or imaginary systems and facilitates experimenting with their variables to explore how the system will likely react to different changes (Page and Kreutzer 2005). As supply chains tend to become more complex and the demand situation uncertain, simulation is the tool of choice for many practitioners to test their supply chains in a fast manner (Terlunen et al. 2014).

For evaluating a specific vSCS, both types of mathematical models have been applied in research already. The first type of approaches uses linear equations to calculate the resulting material flow and costs (Hajfathaliha et al. 2010). As such, they are unable to take dynamic and volatile customer behaviour into account. To overcome this limitation, the second type of approaches employ discrete event-based simulation (Nienhaus 2004; Winkler 2010). Drawbacks of the simulation models applied in previous works are a negligence of customer needs and the non-existence of planning methods controlling the material and information flow within the two planning areas, leading to a loss of precision of these models. Besides, the named authors struggled to analyse complex networks within practicable timeframes.

Subsequently, to fulfil the practical requirements and to close the theoretical research gap, we devise the design of a simulation model being able to evaluate the level of customer orientation and cost effectiveness while overcoming the aforementioned limitations of previous work. To accomplish this goal, we structure our work along the following research questions: (1) How do the different supply chain segments differ in regards to material and information flows? (2) What planning methods and simulation paradigms are appropriate to be applied for the simulation of a segmented supply chain? (3) How can the chosen planning methods and the chosen simulation paradigm be integrated to enable an efficient simulation of a segmented supply chain?

To answer these questions, the remaining paper is structured as follows: First, section two explains the fundamentals of vSCS, describes the differences between order-driven and forecast-driven areas of a supply chain, and provides insights into the commonly applied planning methods for these areas. Furthermore, we discuss which simulation paradigms could be applied in theory for the given problem and argue for the most appropriate one. Within section three, we describe the required conceptual adaptations of the chosen simulation paradigm beyond already existing approaches that must be performed to foster the envisioned decision support. Afterwards, we describe our concrete implementation in section four and close with a summary and outlook towards further research in section five.

## 2 Planning and Simulation Approaches for Specific Supply Chain Segments

The vSCS is addressed by supply chain design task. It defines the separation of the supply chain into multiple sequentially connected value-adding steps, which are together either forming a forecast-driven or order-driven area. These two areas are dissociated by a buffer storage, the so-called customer order decoupling point. In the forecast-driven areas the value creation is being performed based on sales plans, which in turn were generated by using forecasts. Instead, in the order-driven areas, a direct relation to associated customer orders induces the value creation. The decision for the positioning of the customer order decoupling point should optimally be based on a previously performed identification of multiple logistical and economical customer requirements (Winkler 2010).

Generally, the evaluation of a specific vSCS scenario requires an analysis of the associated operational and market goals. While vSCS is considered as being a supply chain design task performed on the strategic level, the realisation of these goals should be evaluated within the tactical level to gain more detailed insights into the corresponding material flows and capacity utilisations. An analysis of the operational level is usually not possible yet, as exact customer orders cannot be forecasted with an appropriate accuracy and planning is thus performed on aggregated product groups.

In the following subsections, we describe (1) exemplary planning techniques which are appropriate to be used within these two different areas of value creation on the tactical level and (2) which simulation paradigm is appropriate to be employed in regards to the associated problem of evaluating a specific segmentation scenario.

### 2.1 Planning Methods within Supply Chain Segments

Scientific theory and practice both distinguish between forecast-driven and order-driven demand planning, in accordance to different supply chain segments. Different planning and controlling approaches are used within these distinguished areas and should be employed when simulating a segmented supply chain, to ensure that the overall simulation model acts accurately with regard to the real logistical system.

Forecast-driven demand planning and demand distribution throughout the supply chain on a tactical level is in most cases either performed through the interaction of local inventory policies or through centralised optimisation models. Systems based on inventory policies reissue supply processes whenever certain inventory amounts

fall below a predetermined level and can be considered as a heuristic (Dangelmaier 2009). While commonly used in practice, the limited exchange of customer demand information often leads to huge demand variations within a supply chain, which can culminate into the well-known Bullwhip Effect. In contrast, central planning approaches are based on detailed forecasts and try to find the optimal balance between inventory holding, production as well as transportation costs.

Order-driven demand planning and demand distribution throughout the supply chain is only performed based on concrete customer orders. In the easiest case, each participant of the supply chain simply propagates required secondary demands to fulfil their customer demands to the next upstream member of the supply chain. This approach however does not take any capacity bottlenecks into account (Albrecht 2010). In contrast, heuristics like capable-to-match can be used to find a feasible solution that considers capacity constraints. Employing a rule-based approach, capable-to-match propagates secondary demands to suppliers that can meet these demands within the required timeframes (Pibernik 2005).

All aforementioned approaches (as well as further specialised approaches which might be employed in practice) can be used to control the distribution of demands within a simulation of a supply chain. The choice of the used planning approaches hereby considerably influences the resulting operational and market target values. However, using these planning approaches alone does neither illuminate their interactions within a segmented supply chain, nor is it possible to attribute for demand volatility. Thus, it is useful to employ these planning approaches only as an element within an overall evaluation method for vSCS scenarios.

## 2.2 Evaluation of Paradigms for the Simulation of Supply chain Segmentation Scenarios

Conventionally, two fundamental classes of simulation concepts are considered in literature: discrete-event simulation (DES) and continuous simulation (CS) (Tolujew et al. 2010). While both approaches have received considerable attention, they have some fundamental drawbacks in the field of Supply Chain Management. Recently, a third approach, the discrete rate-based simulation (DRB) has also grown in popularity (Hennies et al. 2014).

According to a literature review conducted by Tako and Robinson, DES is the most often used simulation concept in Supply Chain Management (2012). It simulates the flow of individual objects, like different products, within a network of components (Page and Kreutzer 2005). State changes are caused by events, e.g. the change of the location of an object (Sokolowski 2009), and occur at discrete points of time. The state of the simulation model is defined by the state of all of its objects. It is assumed that no state changes occur between two discrete events, so that the simulation clock can be advanced from event to event (Law 2015). As DES can represent systems in various levels of detail, its areas of application are extensive. Still, it is particularly useful if the flow of individual goods, like the packet flow in a distribution centre, is considered (Scholz-Reiter et al. 2008). Nevertheless, DES can become very complex and time consuming if the number of entities is high.

In contrast, continuous simulation examines systems in which the state variables change continuously, i.e. uncountable infinite times during a fixed duration (Law 2015). In Supply Chain Management, CS is used to simulate the aggregated flow of

materials, information, and people (Reggelin 2011). Due to that, it is generally assumed that CS is used more often on a strategic level, which focuses on aggregated data and a long planning horizon, than on a tactical or operational level. This assumption, however, could not be proven in the literature review conducted by Tako and Robinson (2012). Still, compared to DES, CS is less often used in the domain of Supply Chain Management, unless the research is focusing on the Bullwhip Effect. CS is appropriate for systems, in which the state variables change continuously over time. Unlike DES, it does not model individual entities, but aggregated flow-rates. Practically, system states of CS models are recalculated in fixed time intervals $\Delta t$. The length of the $\Delta t$ is predetermined and influences runtime and accuracy.

While DES is particularly suitable if the flow of a limited number of discrete elements is considered, CS excels in scenarios with highly aggregated goods or liquids. Both approaches have, however, fundamental disadvantages: DES does not perform well if the number of discrete goods is particularly large, while CS might entail significant integration and rounding errors the longer the simulation runs.

In contrast, DRB simulation can be used to model systems, which are characterised by a huge amount of entities. This approach tries to mitigate the disadvantages of DES and CS by combining the event driven approach of DES with the continuous flows of CS (Krahl 2009). Possible examples are packaging processes, manufacturing processes, and the processing of liquids (Damiron and Nastasi 2008). The DRB paradigm was first described by Siprelle and Phelps (1997), who extended the commercial simulation software ExtendSim with the possibility to model high-speed bulk flow systems in a DRB manner. These extensions were additionally described by Krahl (2009) and by Damiron and Nastasi (2008).

Like CS, DRB does not model individual entities, but aggregated flows of homogeneous goods. While the flow-rates are assumed to change continuously over time in CS, DRB assumes that the flow-rates are piecewise constant and thus only change at discrete points of time. This assumption has decisive advantages, as it becomes possible to create linear-programming formulations for DRB systems (cf. Damiron and Nastasi (2008) for a detailed description). With this, it becomes possible to calculate the flow-rates of all model elements as well as to predict the exact points of time at which some events occur and advance the simulation clock in a next-event time approach. Furthermore, the DRB approach is based on model elements closely aligned to the logistical funnel model by Nyhuis (2003). Due to this inherent characteristics, DRB is particularly well-suited for supply chain simulations on tactical levels and will be used within this work (Terlunen et al. 2014).

## 3 Adaptation of the Discrete Rate-based Simulation Paradigm to Evaluate Segmented Supply Chains

In order to simulate a segmented supply chain the results of the aforementioned planning approaches should be employed to control the material flow in the overall simulation model. As explained in previous sections, the DRB simulation paradigm is considered as suitable for analysing segmented supply chains.

The most promising research results enabling the application of the DRB simulation paradigm was proposed by Reggelin, Hennies, Schenk and Tolujew, who named their approach “MesoScopic simulation” (Schenk et al. 2010; Reggelin and Tolujew

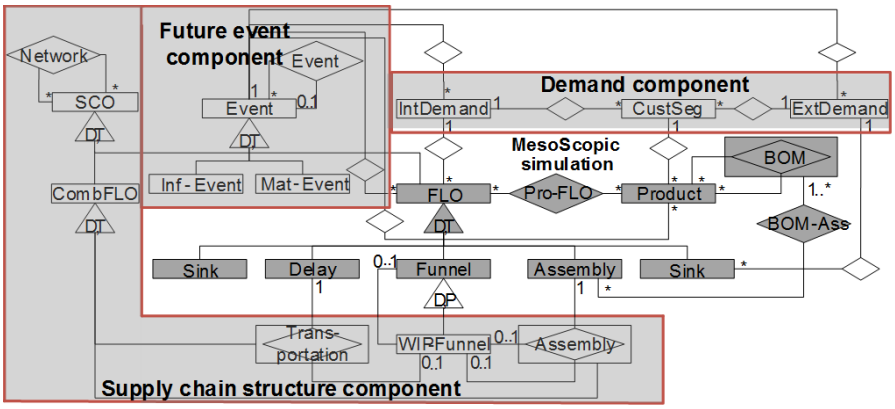


***Figure 1:*** *Structural model of the discrete rate-based simulation paradigm*

2011). Summarising, the research group suggests adaptations in earlier proposed findings by other research groups, e.g. Krahl as well as Damiron and Nastasi. Their major contributions address the extension of DRB model elements in order to steer the material flows. Therefore, they introduced steering variables, which describe how the flow of goods is distributed, either by assigning quotas to model elements or by controlling the initial material flows at the first supply chain elements. The material flow cannot be routed according to customer demands, but only according to the predefined steering variables. Consequently, their approach cannot be used in conjunction with the aforementioned planning methods executed during a simulation run. Thus, it is impossible to evaluate a segmented supply chain accurately.

A demand-centric DRB approach for supply chains was first introduced by Terlunen et al. (2014), who extended the findings of Hennies et al. (2014) with the ability to model customer demands (Fig. 1). They proposed an orchestration of the originally proposed model elements to model complete supply chains by means of the standard processes production, transportation, storage, and supply (supply chain structure component). Further, they used the notion of external and internal demands to model the flow of demand information along the supply chain (demand component). While demand information is propagated upstream the network, products flow downstream the network in order to fulfill the propagated demands. For information about how the demand-centric DRB approach can be implemented to tactical supply chain simulation, we refer to Terlunen et al. (2014).

Using this approach, the results of different planning methods can easily be used to control the material flows within the supply chain. Lot-sizes generated by the planning approaches can be used to determine the internal demands at each supply chain element depicted by the simulation model. However, mechanisms to decide when and how often a planning method should be performed within a simulation are still needed.

A possible approach is to use the existing future events. As usually used in the DES simulation paradigm, e.g. by Kramer and Neculau (1998), we propose an implementation of a future event component in the DRB simulation paradigm, enabling a controlling of the information and material flow during a simulation run. The time-span between two events can be used to define variable time intervals. Furthermore,

control mechanisms and other operations can be performed at the occurrence of an event. We differentiate between three types of events: predefined events, control-based events and model-immanent events. Predefined events are used to control the information and material flow at simulation time and are determined before the simulation run. Control-based events are used to react when certain system states during a simulation run are reached, e.g. by issuing a resupply order when the information about low inventory amounts becomes known. Lastly, model-immanent events are employed to steer the material and information flow during a simulation run. E.g., when the material flow stops at one model element, model-immanent events are propagated downstream to further model elements in order to communicate the information that the material flow must be stopped.

## 4 Prototypical Implementation

To explain how the aforementioned event types can be facilitated to execute the implemented planning methods at the right point in time and to transform the results to internal demands into the simulation model, we exemplary describe such an implementation for the four planning methods explained in section two. After the initialisation of the simulation model at the beginning of a simulation run, the external customer demands enter the system at predetermined times. Afterwards, the external demands are transformed into internal demands, which can either be order-driven or forecast-driven. In accordance to the current supply chain segment and the aligned planning method, the internal demand is distributed in different manners upstream.

For forecast-driven segments of a supply chain we make use of inventory policies and network-planning models as possible planning methods. Concerning inventory policies, one can distinguish between continuous and discrete inventory level control mechanisms (Dangelmaier 2009). In order to implement a discrete inventory control mechanism, our proposed implementation makes use of predefined events. Hereby, the implementation is enabled to check existing inventory levels within the system at predefined points in time. If an inventory level of a product falls below a calculated report inventory level, two control-based event types are generated. The first control-based event causes an internal demand distribution until the next storage element upstream. Afterwards, the second control-based event initialises the start of the material flow at the corresponding storage, located upstream. In contrast, if a continuous inventory control mechanism is implemented, it has to be guaranteed that the inventory remains above a predefined level taking the incoming and outgoing material flow at a storage element into account at all times. Therefore, at every point in time at which the value of the incoming or outgoing material flow changes, a calculation is conducted determining the point in time when the predetermined level will be reached. Furthermore, the corresponding control-based events for the necessary demand distribution and the material flow calculation are generated in this case as well.

Centralised master planning in practice is often employed by using a rolling planning horizon (Fleischmann et al. 2005). Thus, the planning method is executed at constant intervals. Similar to the discrete inventory level control policies, predetermined events can be used to halt the simulation run, execute the master planning method, and to transform the results of the planning method into demands for the

different simulation elements. Furthermore, a recalculation of the material flows is also initiated afterwards by means of control-based events.

For order-driven segments of a supply chain we make use of an upstream-planning approach as well as the capable-to-match heuristic. Moreover, we assume that all customer demands are known as simulation parameters, which in term means that customer demands only enter the simulation model at predefined points in time. Thus, both of these planning approaches can be executed analogous to the centralised master planning in forecast-driven segments of the supply chain. For every point in time, when customer demands exist, the aforementioned two types of events are applicable. Predefined events are used to distribute demands to the corresponding supply chain elements and afterwards control-based events control the material flow.

Figure 2 gives an overview over the complete simulation run for a segmented supply chain in which the forecast-driven segments are controlled by a centralised master planning approach and the order-driven segments by a capable-to-match heuristic. After the decision maker starts the simulation run the supply chain structure and the corresponding necessary parameters are read from an input database. The centralised master planning and the capable-to-match heuristic can be implemented using external algorithms, for which an appropriate interface needs to be devised. For example, we have formulated a mathematical model for the centralised master planning, using the commercial solver CPLEX based on the findings of Pibernik and Sucky (2005). The simulation state can automatically be transformed into the necessary parameters to solve the optimisation problem, while the results are fed back into the simulation model as new demands. The capable-to-match heuristic acts analogous. Finally, results are written into an output database for further analysis.

## 5 Summary and Further Research

After explaining different characteristics of forecast-driven and order-driven segments of a supply chain as well as exemplary planning methods, we investigated multiple simulation paradigms in regard to their applicability to the task of simulating segmented supply chains. Due to its appropriate aggregation level, but especially because of the flexible event-management approach, we argued that the DRB simulation approach is applicable for this task. We described, how event management can be used to initialise and execute different planning methods, enabling us to create an accurate simulation model of an overall vSCS. When applying typical key performance values, it is possible to evaluate multiple segmentation scenarios efficiently. This wasn't possible in other approaches from literature that were designed for this task. Summarising, a viable decision support system for the determination and evaluation of an optimal vSCS scenario was devised.

However, the task of designing such a scenario has not been automated yet. Further research could be done to design decision support tools that automatically devise the position of the customer order decoupling point based on the simulation results. Furthermore, the implementation of alternative planning algorithms, e.g. to be able to simulate decentralised planning methods, should be considered to be able to accurately model more real-life supply chains. Lastly, computational experiments should be performed, to proof that the DRB simulation approach generates computational time savings in comparison to a DES approach.

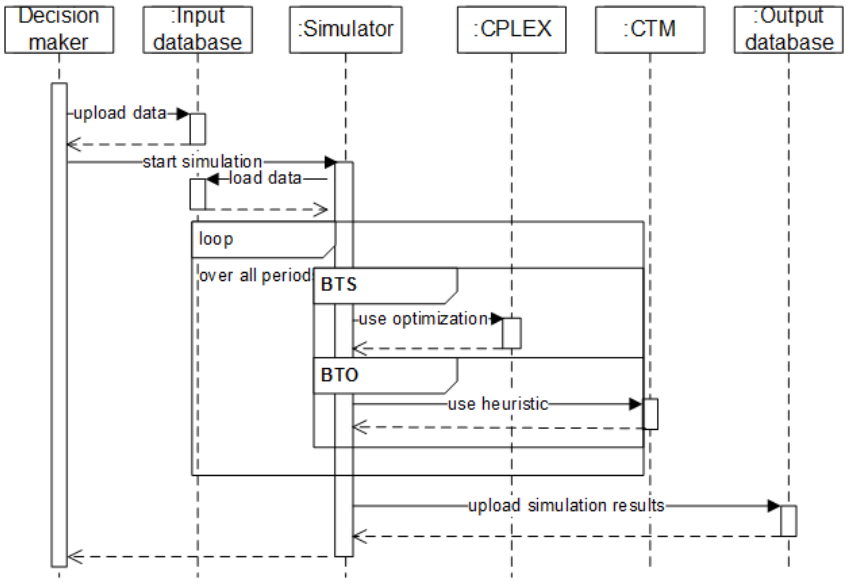


***Figure 2:*** *Sequence diagram of the discrete rate-based simulation*

## References

Aitken, J.; Childerhouse, P.; Christopher, M.; Towill, D.: Designing and managing multiple pipelines. Journal of Business Logistics 26 (2005) 2, pp. 73-95.

Albrecht, M.: Supply chain planning and coordination. In: Supply Chain Coordination Mechanisms: Springer 2010, pp. 5-34.

Bozarth C.; Donald P. Warsing; Barbara B. Flynn; E. James Flynn: The impact of supply chain complexity on manufacturing plant performance. Journal of Operations Management 27 (2009) 1, pp. 78-93.

Damiron, C.; Nastasi, A.: Discrete rate simulation using linear programming. In: Proceedings of the 40th Conference on Winter Simulation, 2008, pp. 740-749.

Dangelmaier, W.: Theorie der Produktionsplanung und -steuerung: Im Sommer keine Kirschpralinen? Dordrecht, New York: Springer 2009.

Fleischmann, B.; Meyr, H.; Wagner, M.: Advanced planning. In: Supply Chain Management and Advanced 2005, pp. 81-106.

Hajfathaliha, A.; Teimoury, E.; Khondabi, I.G.; Fathi, M.: Using queuing approach for locating the order penetration point in a two-echelon supply chain with customer loss. International Journal of Business and Management 6 (2010) 1, pp. 258-268.

Hennies, T.; Reggelin, T.; Tolujew, J.; Piccut, P.-A.: Mesoscopic supply chain simulation. Journal of Computational Science 5 (2014) 3, pp. 463-470.

Hofman, D.: The supply chain top 25: leadership in action. Supply Chain Management Review (2011) 5.

Krahl, D.: ExtendSim advanced techology: discrete rate simulation. In: Winter Simulation Conference, Austin (TX) 2009, pp. 333-338.

Kramer, U.; Neculau, M.: Simulationstechnik. München: Fachbuchverlag Leipzig 1998.

Law, A.M.: Simulation modeling and analysis. New York, NY: McGraw-Hill Education 2015.

Nienhaus, J.: Modeling, analysis and improvement of supply chains – a structured approach. Zürich 2004.

Nyhuis, P.: Logistische Kennlinien: Grundlagen, Werkzeuge und Anwendungen. Berlin: Springer 2003.

Page, B.; Kreutzer, W.: The Java simulation handbook: Simulating discrete event systems with UML and Java. Aachen: Shaker 2005.

Pibernik, R.: Advanced available-to-promise: Classification, selected methods and requirements for operations and inventory management. International Journal of Production Economics 93 (2005) 1, pp. 239-252.

Pibernik, R.; Sucky, E.: Master planning in supply chains. In: Günther, H.-O.; Mattfeld, D.C.; Suhl, L.: (eds.) Supply Chain Management und Logistik. Heidelberg: Physica, pp. 69-93.

PricewaterhouseCoopersAG (Hrsg.): Next-generation supply chains: Efficient, fast and tailored. 2013. www.pwc.com/gx/en/consulting-services/supply-chain/global-supply-chain-survey/assets/pwc-next-generation-supply-chains-pdf.pdf

Reggelin, T.: Mesoskopische Modellierung und Simulation logistischer Flusssysteme. Magdeburg: docupoint 2011.

Reggelin, T.; Tolujew, J.: A mesoscopic approach to modeling and simulation of logistics processes. In: Winter Simulation Conference, Phoenix (AZ) 2011, pp. 1508-1518.

Schenk, M.; Tolujew, J.; Reggelin, T.: A mesoscopic approach to the simulation of logistics systems. In: Dangelmaier, W.; Blecken, A.; Delius, R.; Klöpfer, S. (eds.): Advanced Manufacturing and Sustainable Logistics. Berlin, Heidelberg: Springer 2010, pp. 15-25.

Scholz-Reiter, B.; Beer, C. de; Freitag, M.; Hamann, T.; Rekersbrink, H.; Tervo, J.: Dynamik logistischer Systeme. In: Nyhuis, P. (ed.): Beiträge zu einer Theorie der Logistik. Berlin: Springer 2008, pp. 109-138.

Siprelle, A.J.; Phelps, R.A.: Simulation of bulk flow and high speed operations. In: Winter Simulation Conference, Atlanta (GA) 1997, pp. 706-710.

Sokolowski, J.A.: Simulation: Models that vary over time. In: Sokolowski, J.A.; Banks, C.M. (eds.): Principles of Modeling and Simulation. Hoboken, NJ: John Wiley & Sons 2009, pp. 47-69.

Tako, A.A.; Robinson, S.: The application of discrete event simulation and system dynamics in the logistics and supply chain context. Decision support systems 52 (2012) 4, pp. 802-815.

Terlunen, S.; Horstkemper, D.; Hellingrath, B.: Adaption of the discrete rate-based simulation paradigm for tactical supply chain decisions. In: Winter Simulation Conference, Savannah 2014, pp. 2060-2071.

Tolujew, J.; Reggelin, T.; Kaiser, A.: Discrete Rate Simulation als grundlegendes Paradigma bei der Entwicklung von mesoskopischen Flussmodellen. In: Integrationsaspekte der Simulation: Technik, Organisation und Personal. - Karlsruhe : KIT Scientific Publ. 2010, S. 437-444.

Winkler, H.: Beitrag zur Positionierung von Kundenentkopplungspunkten in Produktionsnetzwerken. Dortmund: Praxiswissen 2010.